FORMAT dwg. NUMBER REVISION DATE SHEET

A0 - PID-001 - 20140526 - R 00

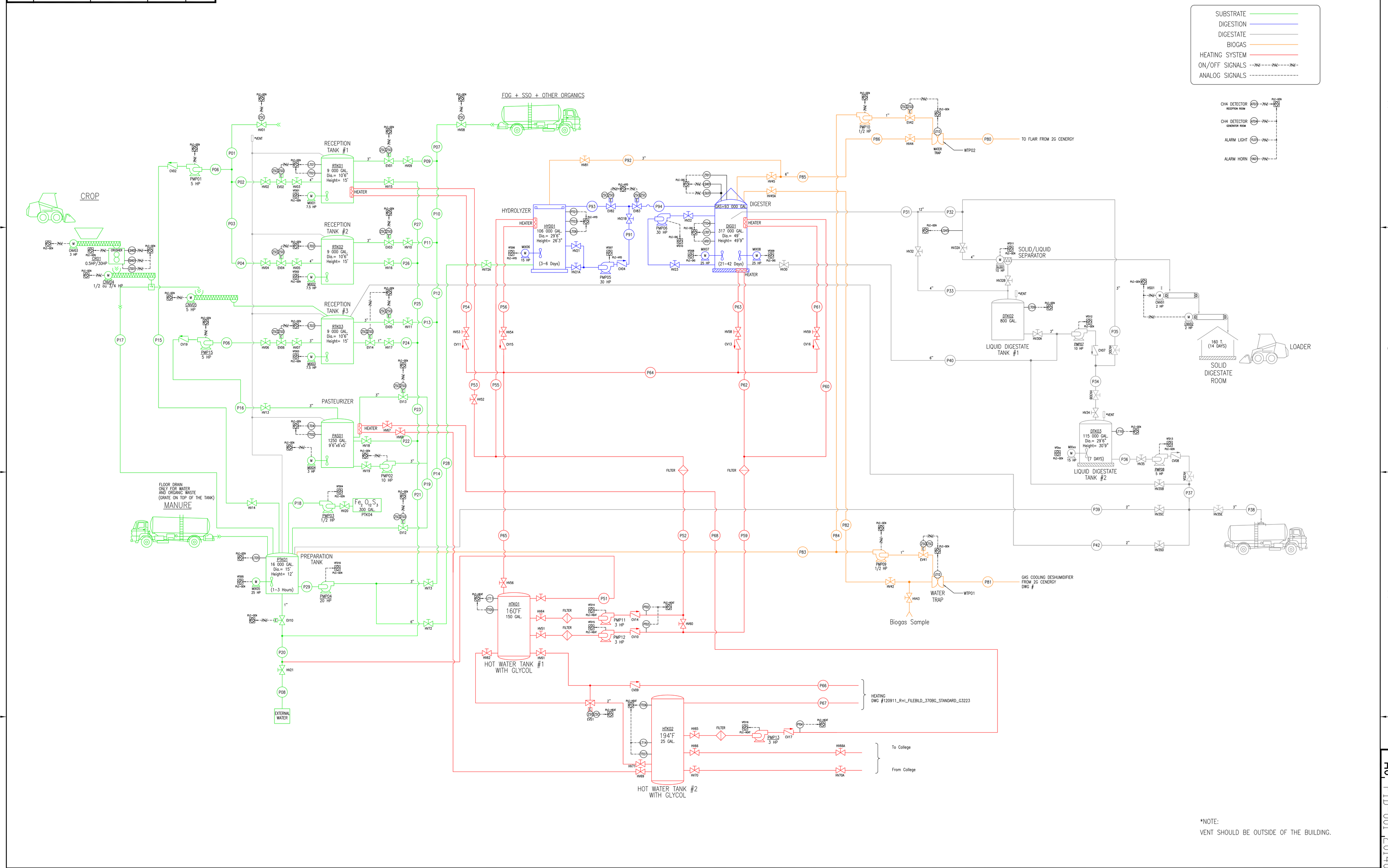

*NOTE:
VENT SHOULD BE OUTSIDE OF THE BUILDING.

REV.	DATE	REVISION OBJECT	PROJECT #	RESSOURCE	DRAWER	ENGINEER	OIQ #
00	2013/01	INITIAL CONCEPTION	VTC1	GTQ	IO.B.	N/A	N/A

THIS PLAN REPRESENT THE ORIGINAL WORK AND / OR REVISED WORKERS REGISTERED IN THE CARTRIDGE

dwg. NUMBER	TITLE
X	
X	
X	
X	
X	
X	
X	
X	

NOTE & LEGEND

REFERENCE DRAWING

DESIGN ENGINEER

OIQ # DATE

LE GROUPE GÉNITIQUE

PROJECT NUMBER BIO12-073

GERALD TREMBLAY 2012/11 DESIGNED BY DATE
IAN-OLIVIER BERGERON 2012/11 DRAWED BY DATE
GERALD TREMBLAY 2012/11 CHECKED BY DATE

PROJECT TITLE: VTC1

PROJECT NUMBER NTS

SCALE

VERMONT TECHNICAL COLLEGE
PROCESS CONTROL
SCHEMATIC

BIO-MÉTHATECH VALORISATION DE MATIÈRES RESIDUELLES

Bio-Méthatech inc.
85 St-Paul O. bur.500
Montréal, H2Y 3V4
Canada, Qc

A0 - PID-001 - 20140526 - R 00

FORMAT dwg. NUMBER REVISION DATE SHEET

A0 - PID-001 - 20140526 - R